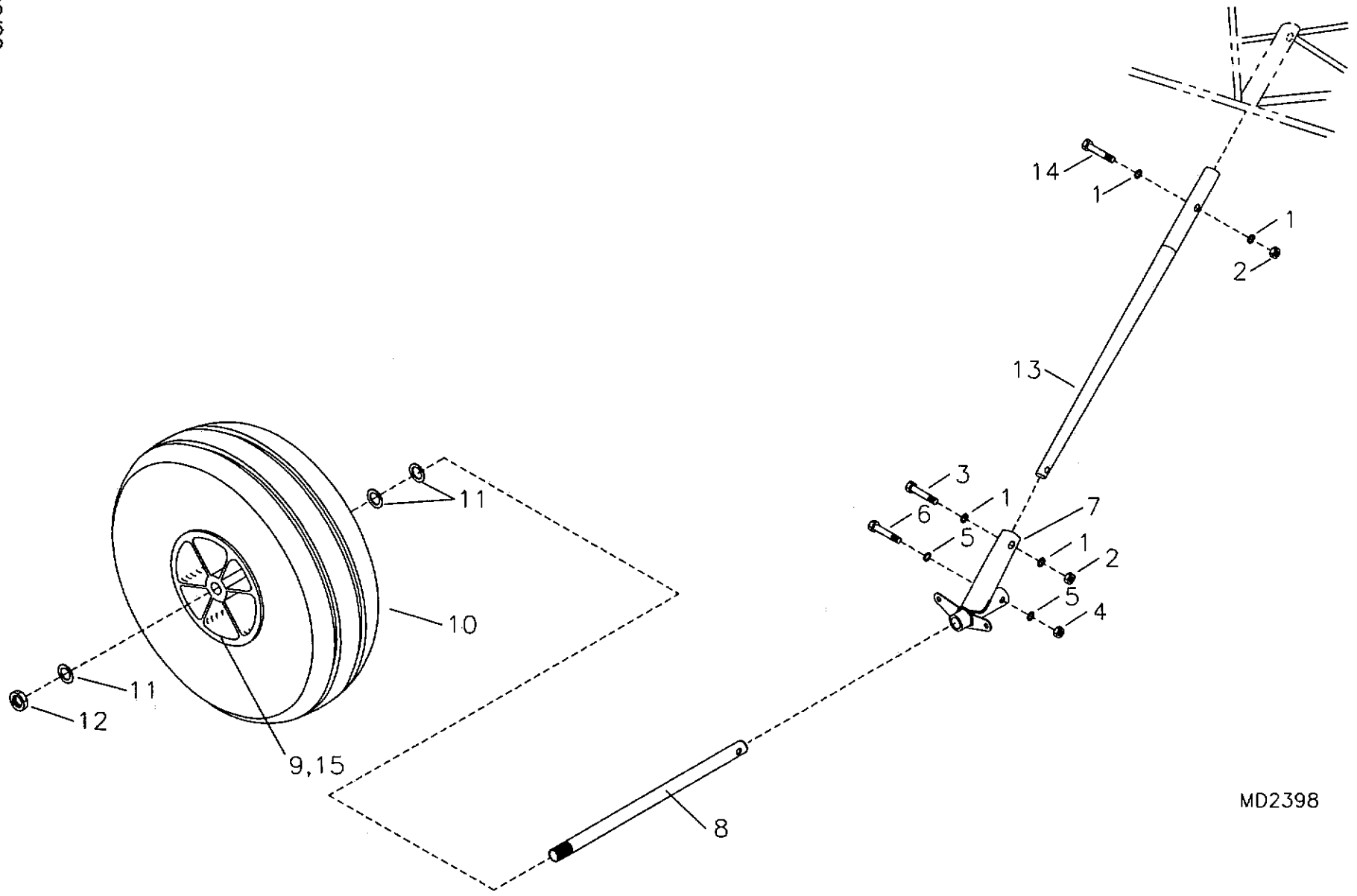

RANS S-6ES COYOTE II
TAILDRAGGER MAIN LANDING GEAR