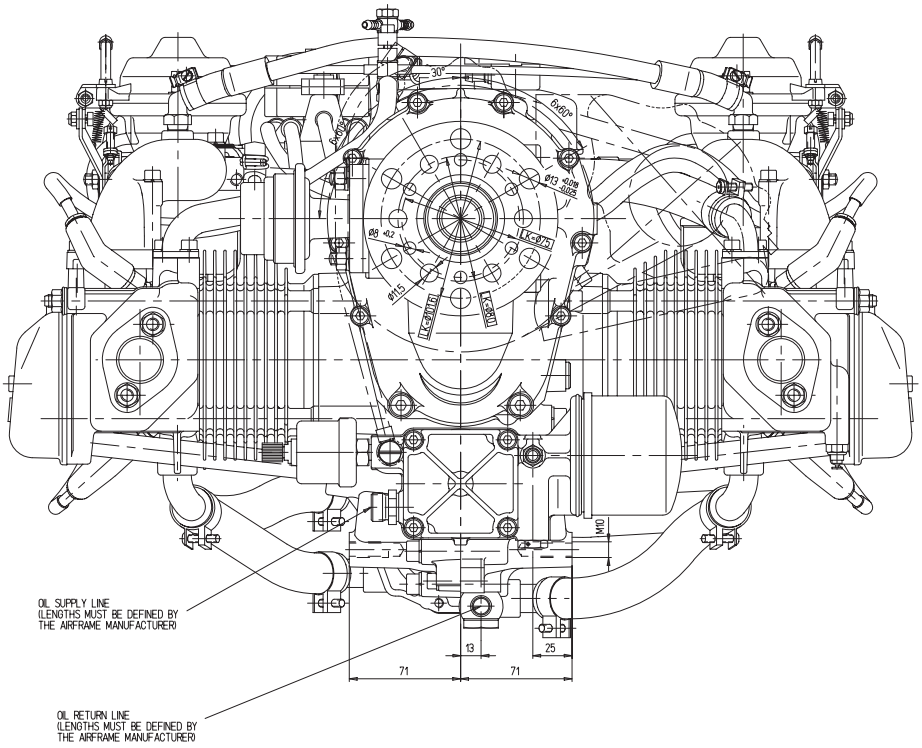
30°
M10
13
25
71
71
OIL SUPPLY LINE
(LENGTHS MUST BE DEFINED BY
THE AIRFRAME MANUFACTURER)
OIL RETURN LINE
(LENGTHS MUST BE DEFINED BY
THE AIRFRAME MANUFACTURER)

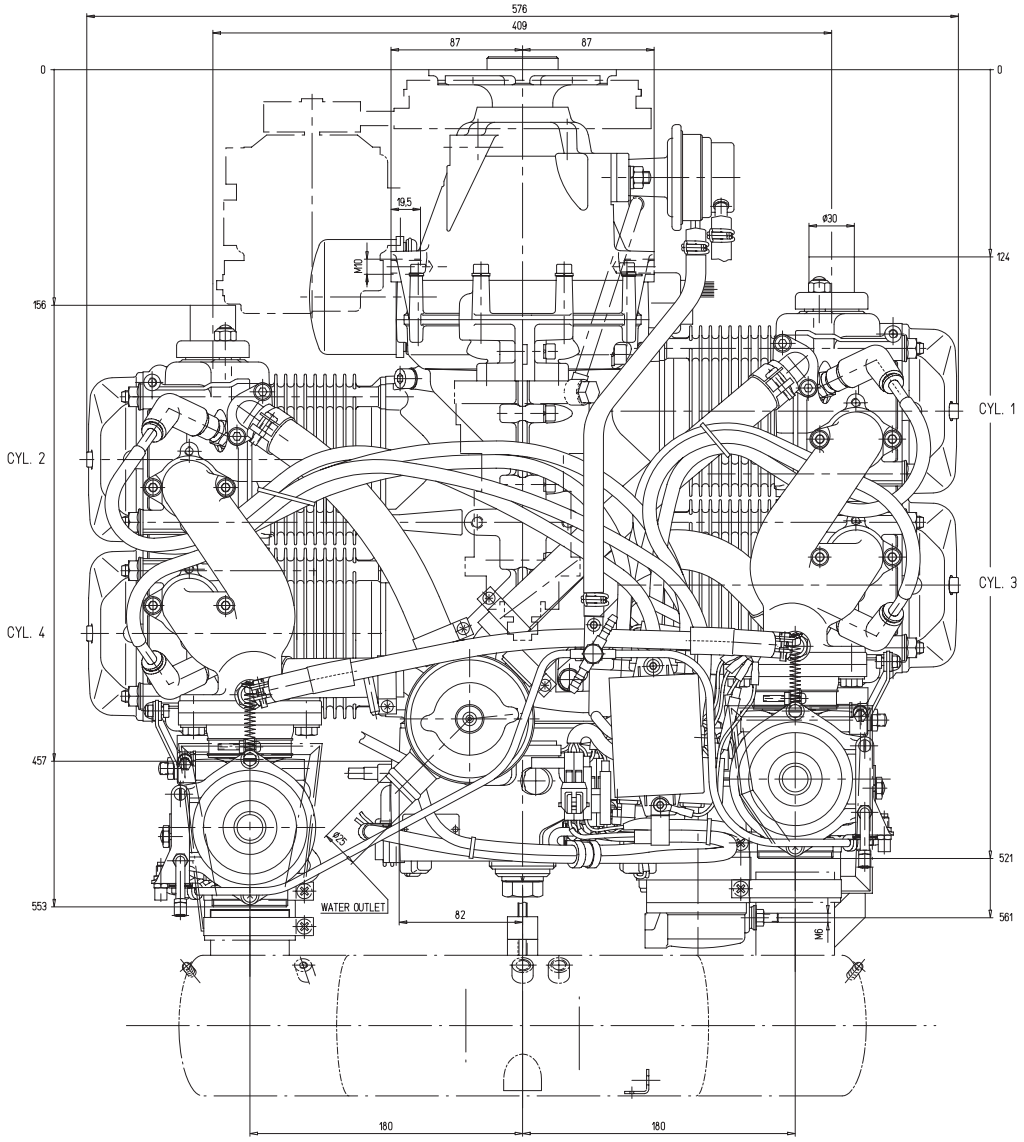
576
409
87
87
0
0
19,5
M10
Ø30
124
156
CYL. 1
CYL. 2
CYL. 3
CYL. 4
457
521
553
561
Ø25
WATER OUTLET
82
M6
180
180