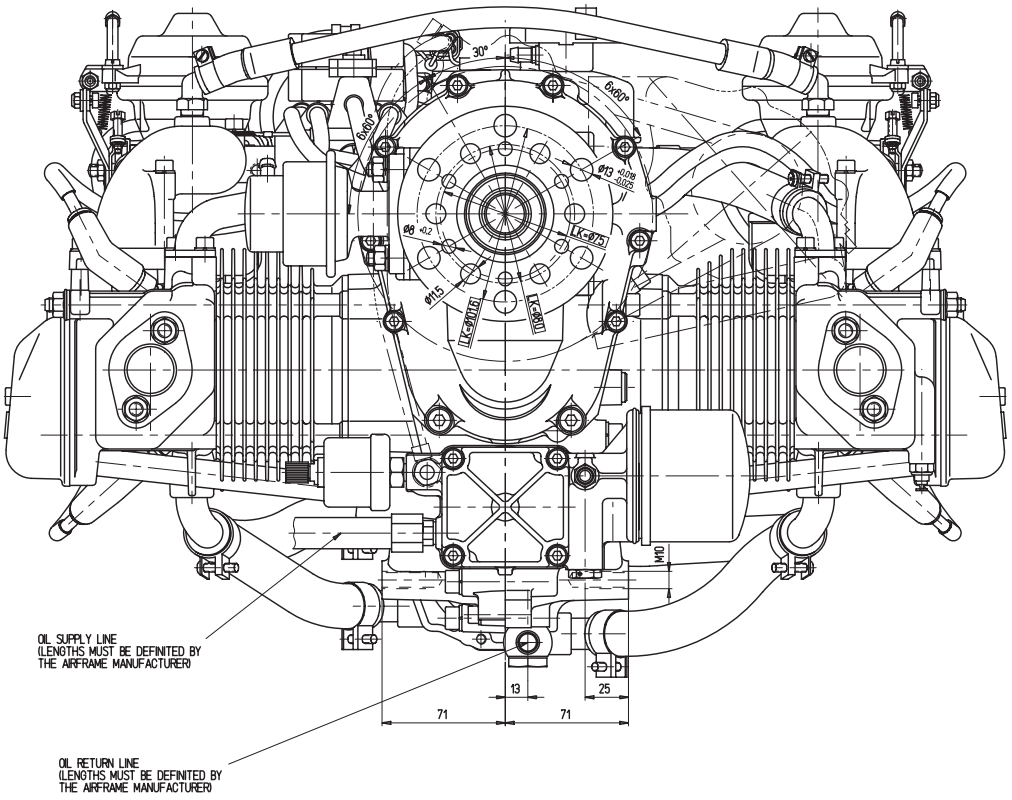
30°
6x60°
6x60°
Ø13 +0,018 -0,025
Ø8 +0,2
LK=Ø75
Ø11,5
LK=Ø101,6
LK=Ø80
M10
OIL SUPPLY LINE
(LENGTHS MUST BE DEFINITED BY
THE AIRFRAME MANUFACTURER)
13
25
71
71
OIL RETURN LINE
(LENGTHS MUST BE DEFINITED BY
THE AIRFRAME MANUFACTURER)

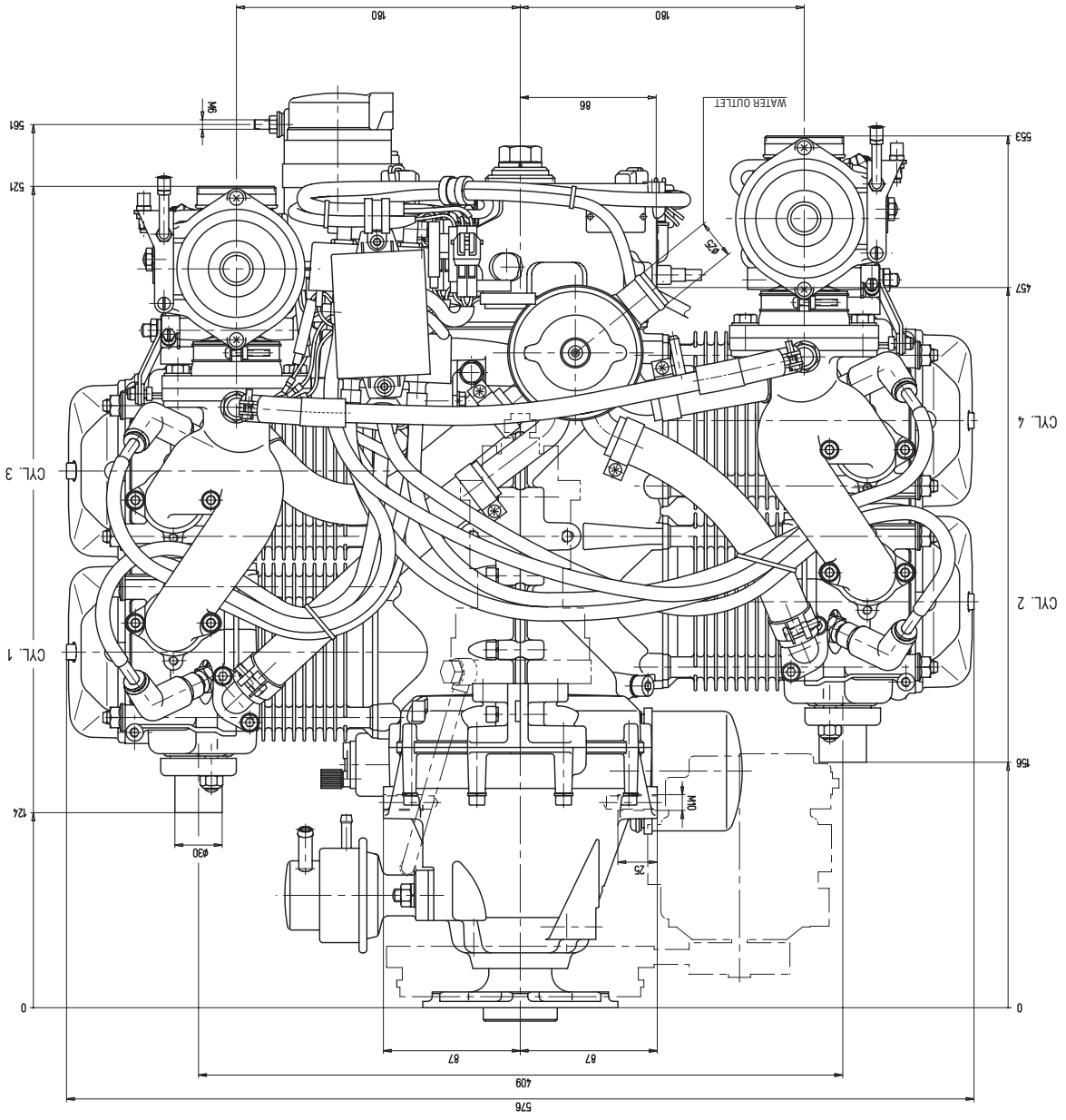
180
180
86
WATER OUTLET
M6
561
521
553
457
Ø25
CYL. 4
CYL. 3
CYL. 2
CYL. 1
156
124
M10
Ø30
25
0
0
87
87
409
576