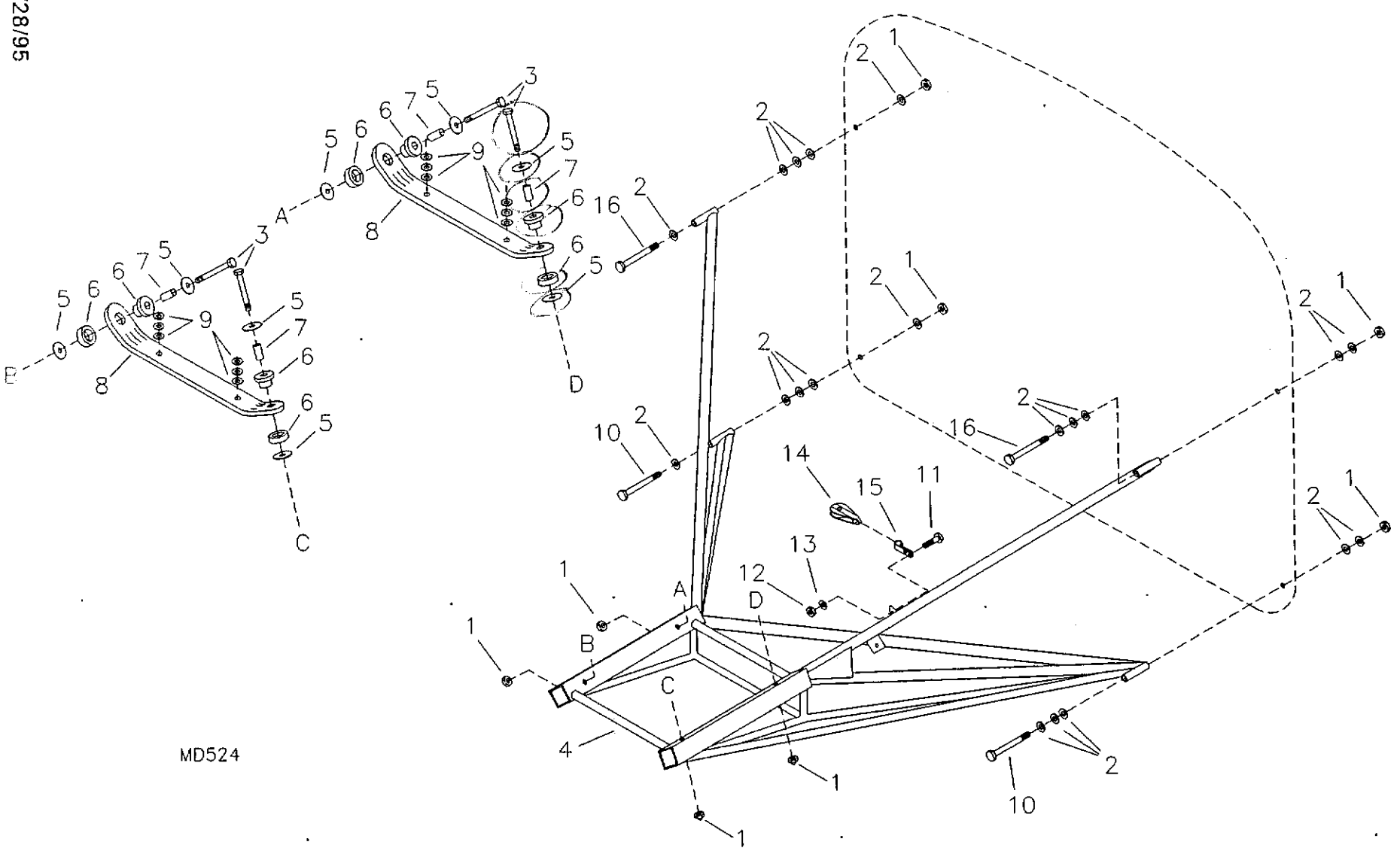

RANS S-6ES COYOTE II
503 AND 582 FOCALIZED ENGINE MOUNT